Catifa 46 / Sled
Design by Lievore Altherr Molina, 2004

Art. 0278: sled base and polypropylene shell
Art. 0278BV: sled base and polypropylene shell with armrests

Stackable chair with sled base in chromed steel. The shell is available in single-color and bi-color polypropylene or upholstered in two grades of hard leather. Available with steel armrests, also upholstered. Glides for wooden floors available upon request without surcharge.

clip_it_easy®

Dimensions*

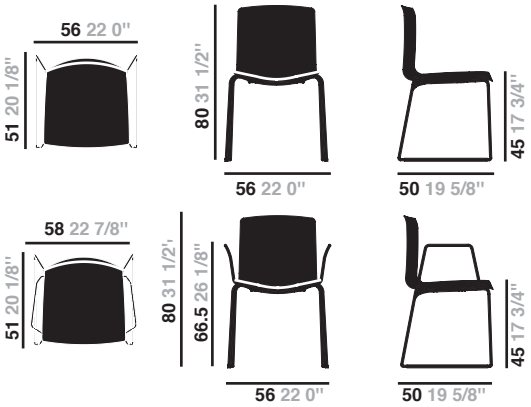

* Files CAD 2D - 3D available for download at www.arper.com

Shipment details

Art. 0278	kg	m³	lb	ft³
1 PCS = 2 boxes	10.4	0.243	22.88	8.581
4 PCS = 2 boxes	32	0.304	70.4	10.735
Art. 0278BV				
1 PCS = 3 boxes	12.7	0.273	27.94	9.640
4 PCS = 2 boxes	39.7	0.340	87.34	12.006

Base finishes

CRO
Chrome
finish
steel

Stainless steel rod sled base available upon request.

Stacking options

Art. 0278 with stacking glide
PO: up to 10 pcs. - CU and CT: up to 5 pcs.
PO: up to 20 pcs. - CU and CT: up to 5 pcs.

Materials

Polypropylene

PO
Polypropylene
one color
10 colors

PO
Polypropylene
two colors
10 colors

Carded In Hard leather

CU
Hard leather
grade 1
4 colors

CT
Hard leather
grade 2
13 colors

arper
T +39 0422 7918
F +39 0422 791800
www.arper.com

Catifa 46 / Sled
Design by Lievore Altherr Molina, 2004

Art. 0280: sled base and upholstered shell
Art. 0280BV: sled base and upholstered shell with armrests

Stackable chair with sled base chromed steel . The shell is available in polypropylene upholstered in leather, faux leather, fabric or customer's fabric. Available with steel armrests, also upholstered. Glides for wooden floors available upon request without surcharge.

clip_it_easy®

Dimensions*

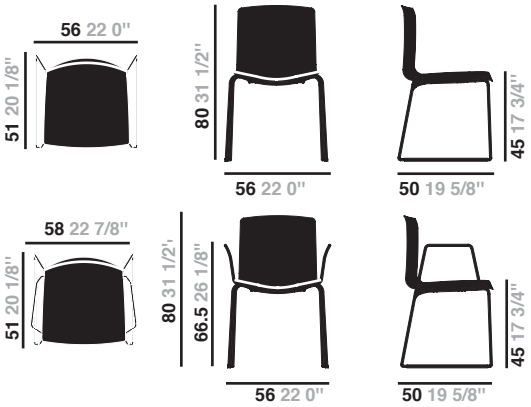

* Files CAD 2D - 3D available for download at www.arper.com

Shipment details

Art. 0280	kg	m³	lb	ft³
1 PCS = 2 boxes	11.7	0.267	25.74	9.429
4 PCS = 2 boxes	38.0	0.360	83.6	12.713
Art. 0280BV				
1 PCS = 3 boxes	14.0	0.295	30.8	10.417
4 PCS = 3 boxes	45.7	0.396	100.54	13.984

Base finishes

CRO
Chrome finish steel

Stainless steel rod sled base available upon request.

Stacking options

Art. 0280 with stacking glide
FABRIC: up to 8 pcs. - LEATHER: up to 5 pcs.

Materials

Carded In Fabrics kvadrat and No Stain

Topas 2
67 colors

Hallingdal 65
58 colors

Remix 2
49 colors

Cava 3
49 colors

Flora 2
33 colors

Pro 2
35 colors

Savanna
12 colors

Clara
27 colors

Tempo
22 colors

Divina MD
27 colors

Scuba
24 colors

No Stain
34 colors

Divina 3
56 colors

Divina Melange 2
24 colors

Tonus 3
64 colors

Field
24 colors

Steelcut Trio 2
49 colors

Sunniva
24 colors

Steelcut 2
43 colors

Pause 4
43 colors

Canvas
28 colors

Carded In Faux leather, Soft leather and chrome free leather by elmo

PI
Faux leather
52 colors

PF
Soft leather
13 colors

ES
Soft leather
Elmosoft®
60 colors

arper
F +39 0422 791800
T +39 0422 7918
www.arper.com

Catifa 46 / Sled
Design by Lievore Altherr Molina, 2004

Graded In Fabrics by

kvadrat
www.kvadrat.dk

camira
www.camirafabrics.com

FIDIVI
www.fidivi.com

Gabriel
www.gabriel.dk

SPRADLING
www.spradling.eu

climatex®
www.climatex.com

Serge Ferrari
www.en.sergeferrari.com

WINTER CREATION
www.en.sergeferrari.com

DESIGN TEX
www.designtex.com

maharam
www.maharam.com

Visit the company website www.arper.com to view the available fabrics and swatches.

Catifa 46 / Sled
Design by Lievore Altherr Molina, 2004

Art. 0312: sled base and shell with upholstered cover
Art. 0312BV: sled base and shell with upholstered cover with armrests

Chair with sled base chromed steel. The shell in polypropylene is upholstered with a removable non-washable cover in leather, faux leather, fabric or customer's fabric. Available with steel armrests, also upholstered. Glides for wooden floors available upon request without surcharge.

clip_it_easy®

Dimensions*

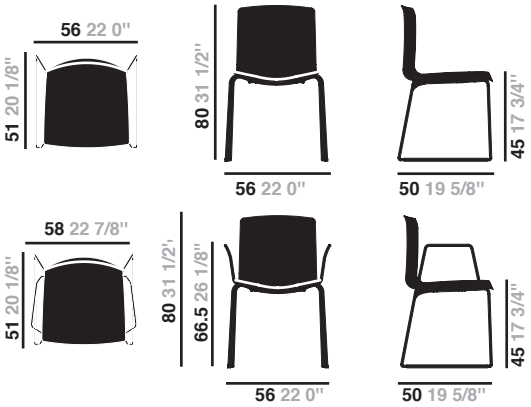

* Files CAD 2D - 3D available for download at www.arper.com

Shipment details

Art. 0312	kg	m³	lb	ft³
1 PCS = 2 boxes	11.7	0.267	25.74	9.429
4 PCS = 2 boxes	38.0	0.360	83.6	12.713
Art. 0312BV				
1 PCS = 3 boxes	14.0	0.295	30.8	10.417
4 PCS = 3 boxes	45.7	0.396	100.54	13.984

Base finishes

CRO
Chrome finish steel

Stainless steel rod sled base available upon request.

Stacking options

Art. 0312 with stacking glide
FABRIC: up to 8 pcs. - LEATHER: up to 5 pcs.

Materials

Carded In Fabrics kvadrat and No Stain

Topas 2
67 colors

Hallingdal 65
58 colors

Remix 2
49 colors

Cava 3
49 colors

Flora 2
33 colors

Pro 2
35 colors

Savanna
12 colors

Clara
27 colors

Tempo
22 colors

Divina MD
27 colors

Scuba
24 colors

No Stain
34 colors

Divina 3
56 colors

Divina Melange 2
24 colors

Tonus 3
64 colors

Field
24 colors

Steelcut Trio 2
49 colors

Sunniva
24 colors

Steelcut 2
43 colors

Pause 4
43 colors

Canvas
28 colors

Carded In Faux leather, Soft leather and chrome free leather by elmo

PI
Faux leather
52 colors

PF
Soft leather
13 colors

ES
Soft leather Elmosoft®
60 colors

arper
F +39 0422 791800
T +39 0422 7918
www.arper.com

Catifa 46 / Sled
Design by Lievore Altherr Molina, 2004

Graded In Fabrics by

kvadrat
www.kvadrat.dk

camira
www.camirafabrics.com

FIDIVI
www.fidivi.com

Gabriel
www.gabriel.dk

SPRADLING
www.spradling.eu

climatex®
www.climatex.com

Serge Ferrari
www.en.sergeferrari.com

WINTER CREATION
www.en.sergeferrari.com

DESIGN TEX
www.designtex.com

maharam
www.maharam.com

Visit the company website www.arper.com to view the available fabrics and swatches.

Catifa 46 / Sled
Design by Lievore Altherr Molina, 2004

Art. 0378: sled base and wood shell
Art. 0378BV: sled base and wood shell with armrests

Stackable chair with sled base in chromed steel. The shell is available in wood, in three finishes (natural oak, bleached oak, wengé).
Optional steel armrests are available upon request.
Glides for wooden floors available upon request without surcharge.

clip_it_easy®

Dimensions*

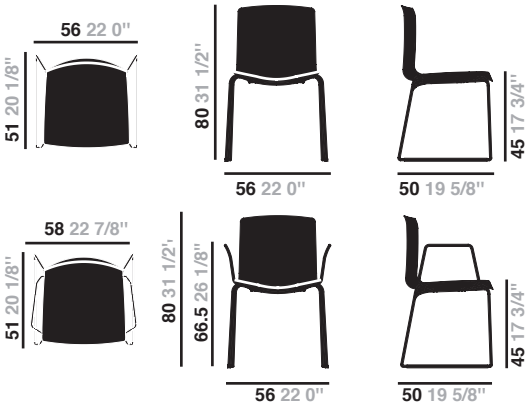

* Files CAD 2D - 3D available for download at www.arper.com

Shipment details

Art. 0378	kg	m³	lb	ft³
1 PCS = 2 boxes	9.88	0.243	21.736	8.581
4 PCS = 2 boxes	29.9	0.316	65.78	11.159
Art. 0378BV				
1 PCS = 3 boxes	12.18	0.271	26.796	9.570
4 PCS = 3 boxes	37.6	0.352	82.72	12.430

Base finishes

CRO
Chrome
finish
steel

Stainless steel rod sled base available upon request.

Stacking options

Art. 0378 with stacking glide
Up to 10 pcs.

Materials

Wood

L
Wood
3 colors

arper
F +39 0422 791800
T +39 0422 7918
www.arper.com

Catifa 46 / Sled
Design by Lievore Altherr Molina, 2004

Art. 0468: sled base and front-face upholstered sheel
Art. 0468BV: sled base and front-face upholstered shell with armrests

Stackable chair with sled base in chromed steel. The shell is available in polypropylene with front-base upholstery in leather, faux leather, fabric or costumer's fabric. Available with steel armrests, also upholstered. Glides for wooden floors available upon request without surcharge.

clip_it_easy®

Dimensions*

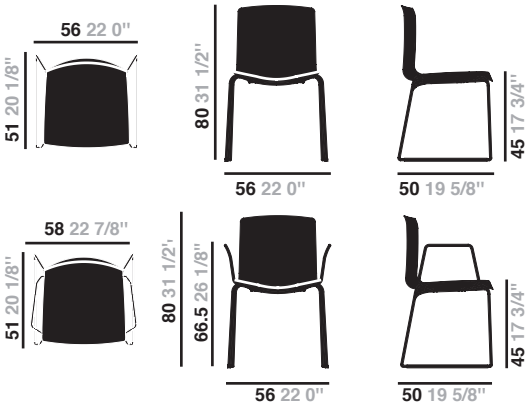

* Files CAD 2D - 3D available for download at www.arper.com

Shipment details

Art. 0468	kg	m³	lb	ft³
1 PCS = 2 boxes	13.10	0.274	28.82	9.676
4 PCS = 2 boxes	39.44	0.368	86.768	12.995
Art. 0468BV				
1 PCS = 3 boxes	15.40	0.302	33.88	10.665
4 PCS = 3 boxes	47.12	0.404	103.664	14.267

Base finishes

CRO
Chrome finish steel

Stainless steel rod sled base available upon request.

Stacking options

Art. 0468 with stacking glide
FABRIC: up to 8 pcs. - LEATHER: up to 5 pcs.

Materials

Polypropylene

PO
Polypropylene
10 colors

Carded In Fabrics kvadrat and No Stain

Topas 2
67 colors

Hallingdal 65
58 colors

Remix 2
49 colors

Cava 3
49 colors

Flora 2
33 colors

Pro 2
35 colors

Savanna
12 colors

Clara
27 colors

Tempo
22 colors

Divina MD
27 colors

Scuba
24 colors

No Stain
34 colors

Divina 3
56 colors

Divina Melange 2
24 colors

Tonus 3
64 colors

Field
24 colors

Steelcut Trio 2
49 colors

Sunniva
24 colors

Steelcut 2
43 colors

Pause 4
43 colors

Canvas
28 colors

arper
T +39 0422 7918
F +39 0422 791800
www.arper.com

Catifa 46 / Sled
Design by Lievore Altherr Molina, 2004

Carded In Faux leather, Soft leather and Chrome Free leather elmo

PI
Faux
leather
52 colors

PF
Soft
leather
13 colors

ES
Soft leather
Elmosoft®
60 colors

Graded In Fabrics by

kvadrat
www.kvadrat.dk

camira
www.camirafabrics.com

FIDIVI
www.fidivi.com

Gabriel
www.gabriel.dk

SPRADLING
www.spradling.eu

climatex®
www.climatex.com

Serge Ferrari
www.en.sergeferrari.com

WINTER CREATION
www.en.sergeferrari.com

DESIGN TEX
www.designtex.com

maharam
www.maharam.com

Visit the company website www.arper.com to view the available fabrics and swatches.

arper
F +39 0422 791800
T +39 0422 7918
www.arper.com

Catifa 46 / Sled
Design by Lievore Altherr Molina, 2004

Art. 0452: sled base and seat surface upholstery
Art. 0452BV: sled base and seat surface upholstery with armrests

Stackable chair with sled base in chromed steel. The shell is available in polypropylene with seat surface upholstery in leather, faux leather, fabric or costumer's fabric. Available with steel armrests, also upholstered. Glides for wooden floors available upon request without surcharge.

clip_it_easy®

Dimensions*

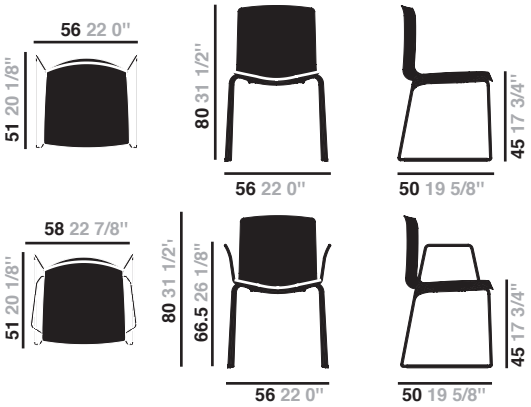

* Files CAD 2D - 3D available for download at www.arper.com

Shipment details

Art. 0468	kg	m³	lb	ft³
1 PCS = 2 boxes	10.40	0.243	22.88	8.581
4 PCS = 2 boxes	32	0.304	70.40	10.735
Art. 0468BV				
1 PCS = 3 boxes	15.40	0.302	33.88	10.665
4 PCS = 3 boxes	47.12	0.404	103.664	14.267

Base finishes

CRO
Chrome finish steel

Stainless steel rod sled base available upon request.

Stacking options

Art. 0468 with stacking glide
FABRIC: up to 8 pcs. - LEATHER: up to 5 pcs.

Materials

Polypropylene

PO
Polypropylene
10 colors

PO
Polypropylene
two colors
10 colors

Carded In Fabrics kvadrat and No Stain

Topas 2
67 colors

Hallingdal 65
58 colors

Remix 2
49 colors

Cava 3
49 colors

Flora 2
33 colors

Pro 2
35 colors

Savanna
12 colors

Clara
27 colors

Tempo
22 colors

Divina MD
27 colors

Scuba
24 colors

No Stain
34 colors

Divina 3
56 colors

Divina Melange 2
24 colors

Tonus 3
64 colors

Field
24 colors

Steelcut Trio 2
49 colors

Sunniva
24 colors

Steelcut 2
43 colors

Pause 4
43 colors

Canvas
28 colors

arper
F +39 0422 791800
T +39 0422 7918
www.arper.com

Catifa 46 / Sled
Design by Lievore Altherr Molina, 2004

Carded In Faux leather, Soft leather and Chrome Free leather elmo

PI
Faux
leather
52 colors

PF
Soft
leather
13 colors

ES
Soft leather
Elmosoft®
60 colors

Graded In Fabrics by

kvadrat
www.kvadrat.dk

camira
www.camirafabrics.com

FIDIVI
www.fidivi.com

Gabriel
www.gabriel.dk

SPRADLING
www.spradling.eu

climatex®
www.climatex.com

Serge Ferrari
www.en.sergeferrari.com

WINTER CREATION
www.en.sergeferrari.com

DESIGN TEX
www.designtex.com

maharam
www.maharam.com

Visit the company website www.arper.com to view the available fabrics and swatches.

arper
F +39 0422 791800
T +39 0422 7918
www.arper.com

Catifa 46 / Sled
Design by Lev[illegible]e A[illegible]he[illegible] M[illegible]na[illegible]0

Carded In Fabrics **kvadrat** and No **Stain**

Topas 2 67 colors | Hallingdal 65 58 colors | Remix 2 49 colors | Cava 3 49 colors | Flora 2 33 colors | Pro 2 35 colors | Savanna 12 colors | Clara 27 colors | Tempo 22 colors | Divina M 27 colors

Scuba 24 colors | No Stain 34 colors | Divina 3 56 colors | Divina Melange 2 24 colors | Tonus 3 64 colors | Pause 4 43 colors

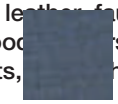

Canvas 28 colors

Art. 0326: sled base, wood shell and front-face upholstery
Art. 0326BV: s[illegible]se, w[illegible]hell [illegible]ont-[illegible]hol[illegible]
with armrests

Chair with chromed steel sled base and wood shell with front upholstery in leather, faux leather, fabric or customer's own material. Glides for wood[illegible]s available upon request without surcharge. Steel armrests, [illegible]holstered, are available upon request.

clip_it_easy®

Dimensions*

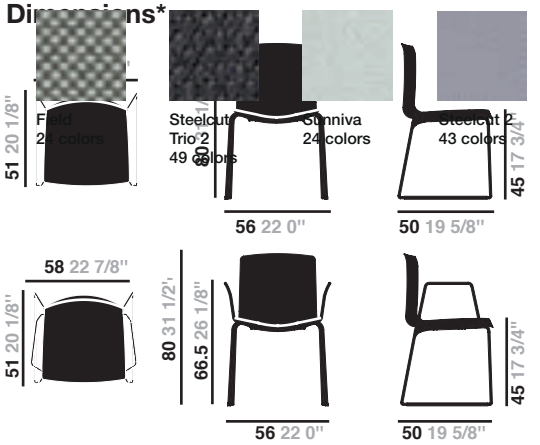

* Files CAD 2D - 3D available for download at www.arper.com

Shipment details

Art. 0326	kg	m³	lb	ft³
1 PCS = 2 boxes	13.10	0.274	28.82	9.676
4 PCS = 2 boxes	39.44	0.368	86.768	12.995

Base finishes

CRO Chrome finish steel

Stainless steel rod sled base available upon request.

Stacking options

Art. 0326 with stacking glide
FABRIC: up to 8 pcs. - LEATHER: up to 5 pcs.

Materials

Wood

L Wood 3 colors

Carded In Fabrics **kvadrat** and No **Stain**

Topas 2 67 colors | Hallingdal 65 58 colors | Remix 2 49 colors | Cava 3 49 colors | Flora 2 33 colors | Pro 2 35 colors | Savanna 12 colors | Clara 27 colors | Tempo 22 colors | Divina MD 27 colors

Scuba 24 colors | No Stain 34 colors | Divina 3 56 colors | Divina Melange 2 24 colors | Tonus 3 64 colors | Field 24 colors | Steelcut Trio 2 49 colors | Sunniva 24 colors | Steelcut 2 43 colors | Pause 4 43 colors

Canvas 28 colors

arper
F +39 0422 791800
T +39 0422 7918
www.arper.com

Catifa 46 / Sled
Design by Lievore Altherr Molina, 2004

Carded In Faux leather, Soft leather and Chrome Free leather elmo

PI
Faux
leather
52 colors

PF
Soft
leather
13 colors

ES
Soft leather
Elmosoft®
60 colors

Graded In Fabrics by

kvadrat
www.kvadrat.dk

camira
www.camirafabrics.com

FIDIVI
www.fidivi.com

Gabriel
www.gabriel.dk

SPRADLING
www.spradling.eu

climatex®
www.climatex.com

Serge Ferrari
www.en.sergeferrari.com

WINTER CREATION
www.en.sergeferrari.com

DESIGN TEX
www.designtex.com

maharam
www.maharam.com

Visit the company website www.arper.com to view the available fabrics and swatches.

arper
F +39 0422 791800
T +39 0422 7918
www.arper.com

Catifa 46 / Sled
Design by Lievore Altherr Molina, 2004

Options and accessories

1

2

3

4

5

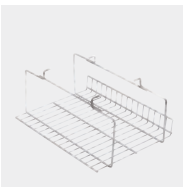
6

7

8

9

10

11

12

13

14

15

16

17

18

1 Armrest with polypropylene one color pad
2 Armrest with upholstery pad
3 Cushion
4 Polypropylene glide with polyurethane insert
5 Polyuretane glide with felt insert
6 Basket
7 Link
8 Stacking glides
9 Trolley
10 Stackability
11 Stacking protection pad
12 Stacking protection pad and link
13 Stacking protection pad
14 Stacking protection pad and link
15 Cover 1
16 Cover 2
17 Cover 3
18 Cover 4

arper
www.arper.com T +39 0422 7918 F +39 0422 791800

Catifa 46 / Sled
Design by Lievore Altherr Molina, 2004

Fire retardant test

UK DOMESTIC:
BS5852-1 Sch.5 Part1: Hard leather grade 1 and 2. BS5852/90 Sez.5 cigarette match: Polypropylene
ITALIA Class 1IM: Divina 3, Divina Melange, Flora, Hallingdal, Pro, Tonus, Topas, Leather PF (with fire retardant treatment, Faux leather).

Resistance test

Art.0278 and 0278BV

ANSI-BIFMA X5.1-2002	12
EN 1022/05	
EN 1728/2000 - EN 15373:2007 6.2.1	3°
EN 1728/2000 - EN 15373:2007 6.2.2	3°
EN 1728/2000 - EN 15373:2007 6.7	3°
EN 1728/2000 - EN 15373:2007 6.8	3°
EN 1728/2000 - EN 15373:2007 6.12	3°
EN 1728/2000 - EN 15373:2007 6.15	3°

Fire retardant test

UK CONTRACT:
BS7176-07 Medium Hazard: Fabric (Flora 2, Pro, Tonus 3, Topas 2, Hallingdal 65). Elmosoft, Faux leather. BS7176-07 Low Hazard: Soft leather. Faux leather. Fabric (Orange 2, Divina 3, Divina Melange 2).
UK DOMESTIC:
BS5852-1 Sch.4-5 Part1: Faux leather. Soft leather, Elmosoft. Fabric (Flora 2, Divina 3, Divina Melange 2, Hallingdal 65, Tonus 3, Topas 2). BS5852-1 Sch. 4 Part1: Fabric (Pro 2).
USA Technical Bullettin 117: Fabric. Faux leather.

Resistance test

Art.0280 and 0280BV

EN 1022/05	
EN 1728/2000 - EN 15373:2007 6.2.1	3°
EN 1728/2000 - EN 15373:2007 6.2.2	3°
EN 1728/2000 - EN 15373:2007 6.7	3°
EN 1728/2000 - EN 15373:2007 6.8	3°
EN 1728/2000 - EN 15373:2007 6.12	3°
EN 1728/2000 - EN 15373:2007 6.15	3°

Fire retardant test

UK DOMESTIC:
BS5852/90 Sez.5 cigarette match

Resistance test

Art.0378 and 0378BV

BS 4875-1/2001 “C”	4°
EN 1728/2000 6.2.1	4°
EN 1728/2000 6.2.2	4°
EN 1728/2000 6.7	4°
EN 1728/2000 6.8	4°
EN 1728/2000 6.13	4°
EN 1728/2000 6.15	4°
EN 1728/2000 6.16	4°
EN 1728/2000 - EN 15373:2007 6.12	3°

Fire retardant test

UK CONTRACT:
BS7176-07 Medium Hazard: Fabric (Flora 2, Pro, Tonus 3, Topas 2, Hallingdal 65). Elmosoft, Faux leather. BS7176-07 Low Hazard: Soft leather. Faux leather. Fabric (Orange 2, Divina 3, Divina Melange 2).
UK DOMESTIC:
BS5852-1 Sch.4-5 Part1: Faux leather. Soft leather, Elmosoft. Fabric (Flora 2, Divina 3, Divina Melange 2, Hallingdal 65, Tonus 3, Topas 2). BS5852-1 Sch. 4 Part1: Fabric (Pro 2).
USA Technical Bullettin 117: Fabric. Faux leather.

Resistance test

Art.0468 and 0468BV

EN 1728/2000 - EN 15373:2007 6.12	3°

Fire retardant test

UK CONTRACT:
BS7176-07 Medium Hazard: Fabric (Flora 2, Pro, Tonus 3, Topas 2, Hallingdal 65). Elmosoft, Faux leather. BS7176-07 Low Hazard: Soft leather. Faux leather. Fabric (Orange 2, Divina 3, Divina Melange 2).
UK DOMESTIC:
BS5852-1 Sch.4-5 Part1: Faux leather. Soft leather, Elmosoft. Fabric (Flora 2, Divina 3, Divina Melange 2, Hallingdal 65, Tonus 3, Topas 2). BS5852-1 Sch. 4 Part1: Fabric (Pro 2).
USA Technical Bullettin 117: Fabric. Faux leather.

Resistance test

Art.0452 and 0452BV

ANSI-BIFMA X5.1-2002	12
EN 1022/05	
EN 1728/2000 - EN 15373:2007 6.2.1	3°
EN 1728/2000 - EN 15373:2007 6.2.2	3°
EN 1728/2000 - EN 15373:2007 6.7	3°
EN 1728/2000 - EN 15373:2007 6.8	3°
EN 1728/2000 - EN 15373:2007 6.12	3°
EN 1728/2000 - EN 15373:2007 6.15	3°

* For more information on product’s certification and environment documents visit www.arper.com or contact us at environment@arper.com

arper
F +39 0422 791800
T +39 0422 7918
www.arper.com

Catifa 46 / Sled
Design by Lievore Altherr Molina, 2004

Fire retardant test

UK CONTRACT:
BS7176-07 Medium Hazard: Fabric (Flora 2, Pro, Tonus 3, Topas 2, Hallingdal 65). Elmosoft, Faux leather. BS7176-07 Low Hazard: Soft leather. Faux leather. Fabric (Orange 2, Divina 3, Divina Melange 2).
UK DOMESTIC:
BS5852-1 Sch.4-5 Part1: Faux leather. Soft leather, Elmosoft. Fabric (Flora 2, Divina 3, Divina Melange 2, Hallingdal 65, Tonus 3, Topas 2). BS5852-1 Sch. 4 Part1: Fabric (Pro 2).
USA Technical Bullettin 117: Fabric. Faux leather.

Resistance test

Art.0312 and 0312BV

EN 1022/05

EN 1728/2000 - EN 15373:2007 6.2.1	3°
EN 1728/2000 - EN 15373:2007 6.2.2	3°
EN 1728/2000 - EN 15373:2007 6.7	3°
EN 1728/2000 - EN 15373:2007 6.8	3°
EN 1728/2000 - EN 15373:2007 6.12	3°
EN 1728/2000 - EN 15373:2007 6.15	3°

arper
F +39 0422 791800
T +39 0422 7918
www.arper.com

* For more information on product's certification and environment documents visit www.arper.com or contact us at environment@arper.com